EX devices for Zone 1, 2, 21 and 22

Bals

Simply. Well. Connected.

IEC

Marking of electric devices is defined in IEC 60079-0 issued in 2004 for explosive gas atmospheres and in IEC 61241-0 issued in 2004 for areas with combustible dusts. In addition to the manufacturer's name or trade mark, type designation, serial number, and the test centre with certificate number, a special coding is required that describes the intended use of the device:

- Ex-symbol
- Symbol of every type of protection that has been applied
  The associated electrical devices that are meant to be installed in the hazardous areas, have to be marked with the symbols for the type of protection in squared brackets, e.g. Ex d[ia] IIC T4.
- Group II, IIA, IIB or IIC for potentially explosive gas atmospheres
- Temperature class for areas with potentially explosive gas atmospheres or max. surface temperature in °C for areas in which combustible dusts may be present.
  Examples:
  Ex d e IIC T4
  Ex d [ia] IIB T5
  Ex mbD T120°C

The types of protection have to clearly show which level they achieve. Some types of protection already contain the appropriate symbol (e.g. ia): With others the letter a, b or c has to be added
d -> db
Example:
Ex db eb IIC T4
Ex db [ia] IIB T5
The second variant (called alternate marking in the standard) is preferentially used.

With this standard, groups for areas where potentially explosive dusts may be present have been introduced as well:

IIIA: combustible flyings
IIIB: non-conductive dust
IIIC: conductive dust
Example for marking of dust:
Ex tb IIIB T120°C

Europe

In Europe, in addition to the marking according to the standard the requirements pursuant to EC-Directive 94/9/EC (ATEX 95) have to be met as well:

- Manufacturer's address
- Symbol CE and the identification number of the notified body
- and category 1, 2 or 3, as well as group II and the letter G (gases) or D (dust)
  Example: Ex 2 II G

Previously, »Ex« was replaced by »EEx« in Europe, if the marking was done pursuant to the standard. Reference has thus been made to the European Standards (EN 50014 ff), which differed from the IEC-standards at that time. With the current editions of the standards this is no longer required, thus devices in Euope are only marked »Ex« now as well.

Up until now standards for non-electrical devices have only been developed by CEN in Europe. Such standards do not yet exist on an international level. Marking closely follows the marking of electrical devices.
Exceptions:

- Ex is not stated, as with ATEX the Ex -sign already refers to explosion protection
- Ignition protection level is not given. Alternative marking is not used either. The equipment protection level has to be defined with the category.

A summary of the topic marking of electrical and non-electrical devices can be found in the enclosure 7.7 and 7.8.

Russia

Marking of explosion-protected electrical equipment is done according to GOST R 51330.0-99 and according to the standards for the individual types of protection.
Marking of explosion protection contains:

- the level of explosion protection
- Ex-symbol
- symbol of the types of protections that have been applied
- equipment group (I, II or IIA, IIB, IIC)
- temperature class
  symbol X, when special conditions have to be observed for safe use or if the product is an Ex-component.

North America

In addition to such data as for example, manufacturer, type, serial number and electrical data, data concerning explosion protection must be included in the marking of the equipment. Specifications are given in NEC, CEC and the respective construction regulations of the test centres.

Class I, II & III, Division 1 and 2
Approved electrical equipment for Class I, Class II and Class III, Division 1 and Division 2 has to be marked with the following data:

1. Class(es), Division(s)
   (optional, except for Division 2)
2. Gas-/dust-group(s)
3. Operating temperature or temperature class
   (optional for T5 and T6)
   Example: Class I Division 1 Groups C D T4

Class I, Zone 0, 1 and 2
For equipment for use in Class I, Zone 0, Zone 1 or Zone 2 a difference is made between »Division Equipment« and »Zone Equipment«.

(1) Division Equipment
Equipment approved for Class I, Division 1 and/or Class I, Division 2 may be marked with the following data:

1. Class I, Zone 1 or Class I, Zone 2
2. Gas group(s) IIA, IIB or IIC
3. Temperature class
4. Types of protection
   Example: Class I Zone 1 d,e IIC T4

(2) Zone Equipment
Equipment complying with several types of protection pursuant to Article 505 of NEC and section 18 of CEC have to be marked as follows:

1. Class (optional in Canada)
2. Zone (optional in Canada)
3. Symbol AEx (USA) or Ex or EEx (Canada)
4. Symbol of the type(s) of protection that have been applied
5. Group of the electrical equipment II or gas group(s) IIA, IIB or IIC
6. Temperature class
   Example: Class I Zone 0 AEx ia IIC T6

IP66 through bayonet locks, even while plugged in

Plug with IP66 in every position

100% backwards compatible with the CES series

EX DEVICES

■ marking of electrical devices in accordance with directive 94/9 EC (ATEX 96) and IEC 60079-0

Type of protection	standard symbol	alternate symbol	Zone	Main application	Standard
increased safety	e	eb	1	terminal and junction boxes, cage induction motors, light fittings	IEC 60079-7 EN 60079-7
flameproof enclosures	d	db	1	switchgear, control stations, motors,	IEC 60079-1 EN 60079-1
pressurized enclosures	px py pz p	pxb pyb pzc pb pc	1 1 2 21 22	switchgear and control cabinets, analysers, large motors	IEC 60079-2 / IEC 61241-4 EN 60079-2 / EN 61241-4
intrinsic safety	ia ib ic	ia ib ic	0, 20 1, 21 2	instrumentation technology, field-bus technology, sensors, actuators	IEC 60079-11 / IEC 61241-11 EN 60079-11 / EN 61241-11
oil immersion	o	ob	1	transformers, starting resistors	IEC 60079-6 EN 60079-6
powder filling	q	qb	1	sensors, electronic ballasts, electronic devices	IEC 60079-5 EN 60079-5
encapsulation	ma mb mc	ma mb mc	0, 20 1, 21 2, 22	display units, sensors, electronic devices	IEC 60079-18 / IEC 61241-18 EN 60079-18 / EN 61241-18
type of protection „n"	n_	n_c	2	electrical apparatus for Zone 2	IEC 60079-15 EN 60079-15
protection by enclosures	ta tb tc	ta tb tc	20 21 22	switchgear and control station, terminal and connection boxes, control boxes, motors, light fittings	IEC 60079-31 / IEC 61241-1 EN 60079-31 / EN 61241-1

Marking of electrical equipment

STAHL

mines		
Group I		Methane
explosive gas atmosphere		
Group II	IIA	Propane
	IIB	Ethylene
	IIC	Hydrogene
explosive dust atmosphere		
Group III	IIIA	combustible flyings
	IIIB	non-conductive dust
	IIIC	conductive dust

Type of protection — Group

ATEX-marking — **Ex II 2G Ex db [ia] IIC T6** — max. surface temperature

equipment-group I: mines; equipment-group II: other places

hazardous places	Zone 0	Zone 20	Zone 1	Zone 21	Zone 2	Zone 22	mines
Dangerous explosive atmosphere	continously or long-term or frequently		likely to occur		not likely to occur or for short period		
equipment category	1G	1D	2G	2D	3G	3D	M1 or M2
EPL* (IEC/EN 60079-0)	Ga	Da	Gb	Db	Gc	Dc	Ma or Mb

* when not using the alternate symbols the EPL shall be specified:: e.g. Ex d [iaGa] IIC T6 Gb

explosive gas atmosphere: temperature classes	
450 °C	T1
300 °C	T2
200 °C	T3
135 °C	T4
100 °C	T5
85 °C	T6

explosive dust atmosphere: surface temperature

T ...°C (e.g.: T 80°C)

- Various versions:
  Extra-low voltage, 16A
- Large handle, can be locked in position 0 and 1
- Optimal contact by means of self-cleaning laminated contacts
- Low plugging and pulling forces through floating pins
- With motor switching capacity AC-3 acc. to IEC/EN 60947-3
- Optional auxiliary contacts for control and signalling pur poses
- IP66 in any application position

Various versions

Foldable strain relief

- 8570/11 (16A) with terminals up to 6 mm² (previously 4 mm²)
  - can be used for larger cross sections
- Plug with foldable strain relief
  - quick and easy to install
- Plug with improved connection terminals
  - simple and reliable connection
- Pressure screw on plug with locking element
  - faster connection

Distributors can also be mounted according to your requirements.

- With flange sockets from 16A to 125A (25V to 690V)
- The distributors can be mounted with fuses of type 8561, circuit breakers of type 8562, FI/LS of type 8562, main switches and many other components.
- The distributors are manufactured according to customer specifications.

Cable roller

- Cable roller with 16A flange socket, corresponding plug and 30m cable (3x2.5mm2)

  16A, 230V, 3-pole

  16A, 400V, 5-pole

  Other voltages on request

Surface mounting socket outlet - extra-low voltage

- For use in Zone 2 and 22
- 16 A version for extra-low voltages up to 50 V
- Optimal contact by means of self-cleaning laminated contacts
- Protection type IP66 (IP55 while plugged in)
- Acc. to EX II 3 G EEx nAC IIC T6, T5
- Temp. -20…+40°C (-50…+55°C on request)
- Cable entry: 1 x M25 & 1 x sealing plug M25

Ampere	Polzahl	24V 50-60 Hz ---	42V 50-60 Hz 12h	⎓ bis 50V 10h	Stück	g Stück
16	2	41080	41082	41081	1	920
16	3	41083	41084		1	940

Bals no. 41083

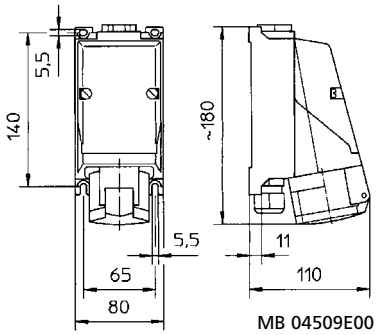

MB 04509E00

Plug - extra-low voltage

- For use in Zone 2 and 22
- 16 A version for extra-low voltages up to 50 V
- Low plugging and pulling forces through floating pins
- Protection type IP54
- Acc. to EX II 3 G EEx nAC IIC T6, T5
- Temp. -20…+40°C (-50…+55°C on request)
- Cable diameter 11….21 mm

Ampere	Polzahl	24V 50-60 Hz ---	42V 50-60 Hz 12h	⎓ bis 50V 10h	Stück	g Stück
16	2	44074	44076	44075	1	220
16	3	44077	44078		1	230

Bals no. 44077

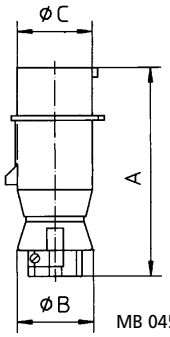

MB 04510E00

Ampere	16	16
Poles	2	3
A	140. 0	140.0
ø B	53.0	53.0
ø C	42.0	42.0

Surface mounting socket outlet

- For use in Zone 2 and 22
- Large handle, can be locked in position 0 and 1
- Optimal contact by means of self-cleaning laminated contacts
- Low plugging and pulling forces
- With motor switching capacity AC-3 acc. to IEC/EN 60947-3
- Optional auxiliary contacts for control and signalling purposes
- IP66 in any application position
- Acc. to EX II 3 G EEx nAC IIC T6 (16A), EX II 3 G EEx nAC IIC T6,T5 (32A)
- Cable entry: 1 x M25 & 1 x sealing plug M25 (16A), 1 x M32 & 1 x sealing plug M32 (32A)

2P+E 3P+E 3P+N+E Ampere	Polzahl	110V 50-60 Hz 3pol 4pol 5pol 4h 4h 4h	230V 50-60 Hz 3pol 4pol 5pol 6h 9h 9h	400V 50-60 Hz 3pol 4pol 5pol 9h 6h 6h	500V 50-60 Hz 3pol 4pol 5pol 7h 7h 7h	Stück	g Stück
16	3		160513			1	1120
16	4			160514		1	1350
16	5			160515		1	1450
32	4			160516		1	2000
32	5			160517		1	2200

Bals no. 160517

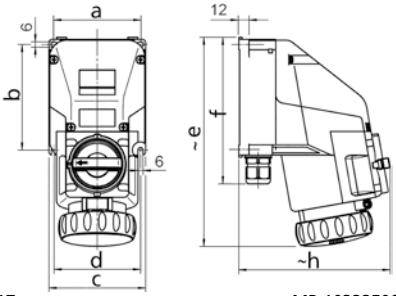

MB 10333E00

Ampere	16	16	16	32	32
Poles	3	4	5	4	5
a	94.0	104.0	104.0	124.0	124.0
b	115.0	125.0	125.0	150.0	150.0
c	105.0	115.0	115.0	135.0	135.0
d	93.0	103.0	103.0	123.0	123.0
e	232.0	248.0	248.0	281.0	281.0
f	164.0	174.0	174.0	204.0	204.0
h	168.0	181.0	181.0	207.0	207.0

Surface mounting socket outlet

- For use in Zone 2 and 22
- Large handle, can be locked in position 0 and 1
- Optimal contact by means of self-cleaning laminated contacts
- Low plugging and pulling forces
- With motor switching capacity AC-3 acc. to IEC/EN 60947-3
- Optional auxiliary contacts for control and signalling purposes
- IP66 in any application position
- Acc. to EX II 3 G EEx nAC IIC T6, T5, T4 (63A)
- Cable entry: 1 x M50 & 1 x sealing plug M25 (63A)

2P+E Ampere	3P+E Polzahl	3P+N+E Polzahl	110V 50-60 Hz 3pol 4h	110V 50-60 Hz 4pol 4h	110V 50-60 Hz 5pol 4h	230V 50-60 Hz 3pol 6h	230V 50-60 Hz 4pol 9h	230V 50-60 Hz 5pol 9h	400V 50-60 Hz 3pol 9h	400V 50-60 Hz 4pol 6h	400V 50-60 Hz 5pol 6h	500V 50-60 Hz 3pol 7h	500V 50-60 Hz 4pol 7h	500V 50-60 Hz 5pol 7h	Stück	g Stück
63	4								**160518**						1	7900
63	5								**160519**						1	7800

Bals no. 160519

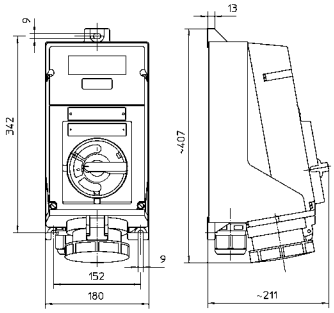

MB 04508E00

Surface mounting socket outlet

- For use in Zone 2 and 22
- Large handle, can be locked in position 0 and 1
- Optimal contact by means of self-cleaning laminated contacts
- Low plugging and pulling forces
- With motor switching capacity AC-3 acc. to IEC/EN 60947-3
- Optional auxiliary contacts for control and signalling purposes
- IP66 in any application position
- Acc. to EX II 3 G EEx nAC IIC T6, T5 (32 & 125A)
- Cable entry: 1 x M63 & 1 x sealing plug M25 & 1 x M63 (125A)

2P+E Ampere	3P+E Polzahl	3P+N+E Polzahl	110V 50-60 Hz 3pol 4h	110V 50-60 Hz 4pol 4h	110V 50-60 Hz 5pol 4h	230V 50-60 Hz 3pol 6h	230V 50-60 Hz 4pol 9h	230V 50-60 Hz 5pol 9h	400V 50-60 Hz 3pol 9h	400V 50-60 Hz 4pol 6h	400V 50-60 Hz 5pol 6h	500V 50-60 Hz 3pol 7h	500V 50-60 Hz 4pol 7h	500V 50-60 Hz 5pol 7h	Stück	g Stück
125	4								**160520**						1	20,920
125	5								**160521**						1	22,040

Bals no. 160521

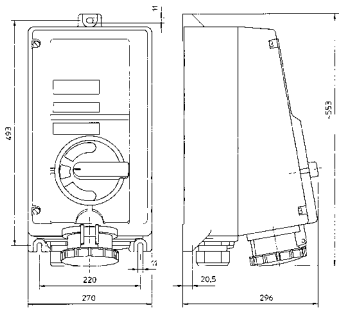

MB 04504E00

EX DEVICES FOR ZONE 2 AND 22

■ for occasional hazardous explosive atmospheres

Plug

- For use in Zone 2 and 22
- Low plugging and pulling forces through floating pins
- Optional auxiliary contacts for control and signalling purposes
- IP66 in any application position
- Acc. to EX II 3 G EEx nAC IIC T6 (16A)
- Acc. to EX II 3 G EEx nAC IIC T6, T5 (32A)
- Temp. -20…+40°C, (-50…+55°C on request)
- Cable diameter 8…20 mm (16A)
- Cable diameter 12…28 mm (32A)

2P+E Ampere	3P+E Polzahl	3P+N+E Polzahl	110V 50-60 Hz 3pol 4pol 5pol 4h 4h 4h	230V 50-60 Hz 3pol 4pol 5pol 6h 9h 9h	400V 50-60 Hz 3pol 4pol 5pol 9h 6h 6h	500V 50-60 Hz 3pol 4pol 5pol 7h 7h 7h	Stück	g Stück
16	3			211079			1	310
16	4				211080		1	380
16	5				211081		1	430
32	4				211082		1	500
32	5				211083		1	600

Bals no. 211083

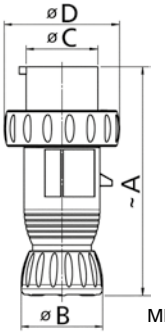

MB 10340E00

Ampere	16	16	16	32	32
Poles	3	4	5	4	5
A	176.0	176.0	176.0	204.0	204.0
ø B	60.0	60.0	60.0	72.0	72.0
ø C	43.5	49.0	56.5	57.0	63.4
ø D	76.0	89.0	92.0	99.0	102.0

Plug

- For use in Zone 2 and 22
- Low plugging and pulling forces through floating pins
- Optional auxiliary contacts for control and signalling purposes
- IP66 in any application position
- Acc. to EX II 3 G EEx nAC IIC T6, T5, T4 (63A)
- Acc. to EX II 3 G EEx nAC IIC T6, T5 (125A)
- Temp. -20…+40°C (-50…+55°C on request)
- Cable diameter 24…36 mm (63A)
- Cable diameter 30…50 mm (125A)

2P+E Ampere	3P+E Polzahl	3P+N+E Polzahl	110V 50-60 Hz 3pol 4pol 5pol 4h 4h 4h	230V 50-60 Hz 3pol 4pol 5pol 6h 9h 9h	400V 50-60 Hz 3pol 4pol 5pol 9h 6h 6h	500V 50-60 Hz 3pol 4pol 5pol 7h 7h 7h	Stück	g Stück
63	4				211084		1	935
63	5				211085		1	990
125	4				211086		1	1280
125	5				211087		1	1380

Bals no. 211087

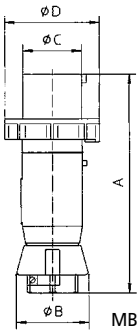

MB 04511E00

Ampere	63	63	125	125
Poles	4	5	4	5
A	268.5	268.5	310.5	310.5
ø B	84.0	84.0	96.0	96.0
ø C	69.5	69.5	82.0	82.0
ø D	112.0	112.0	125.0	125.0

Surface mounting socket outlet - extra-low voltage

- For use in Zone 1 and 21
- 16 A version for extra-low voltages up to 50 V
- Optimal contact by means of self-cleaning laminated contacts
- Protection type IP54
- Acc. to EX II 2 G Ex de IIC T6
- Temp. -30…+ 45°C, (-45°C on request - internal lubrication with silicone grease)
- Cable entry:
  1 x M25 & 1 x sealing plug M25

Ampere	Polzahl	24V 50-60 Hz ---	42V 50-60 Hz 12h	⎓ bis 50V 10h	Stück	g Stück
16	2	41085	41087	41086	1	920
16	3	41088	41089		1	940

Bals no. 41088

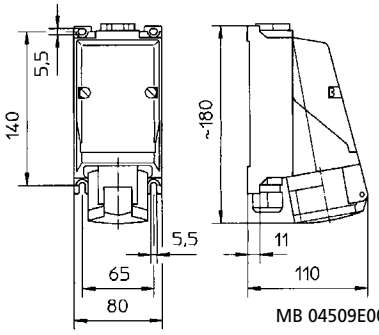

MB 04509E00

Plug - extra-low voltage

- For use in Zone 1 and 21
- 16 A version for extra-low voltages up to 50 V
- Low plugging and pulling forces through floating pins
- Protection type IP54
- Acc. to EX II 2 G Ex de IIC T6
- Temp. -30…+ 45°C, (-45°C on request - internal lubrication with silicone grease)
- Cable diameter 11….21 mm

Ampere	Polzahl	24V 50-60 Hz ---	42V 50-60 Hz 12h	⎓ bis 50V 10h	Stück	g Stück
16	2	44079	44081	44080	1	220
16	3	44082	44083		1	230

Bals no. 44082

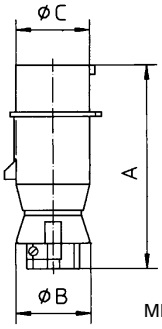

MB 04510E00

Ampere	16	16
Poles	2	3
A	140.0	140.0
ø B	53.0	53.0
ø C	42.0	42.0

Surface mounting socket outlet

- For use in Zone 1 and 21
- Large handle, can be locked in position 0 and 1
- Optimal contact by means of self-cleaning laminated contacts
- Low plugging and pulling forces
- With motor switching capacity AC-3 acc. to IEC/EN 60947-3
- Optional auxiliary contacts for control and signalling purposes
- IP66 in any application position
- Acc. to EX de IIC T6, with intrinsically safe auxiliary contacts Ex de(ia) IIC T6 - gas explosion protection, EX tD A21 IP66 T80°C - dust explosion protection - 16A, EX de IIC T6 T5, with intr. safe aux. contacts Ex de(ib) IIC T6 T5 - gas explosion protection - 32-125A, EX tD A21 IP66 - dust explosion protection- 32-125A
- Cable entry: 1 x M25 & 1 x sealing plug M25 (16A), 1 x M32 & 1 x sealing plug M32 (32A)

2P+E Ampere	3P+E 3P+N+E Polzahl	110V 50-60 Hz 3pol 4pol 5pol 4h 4h 4h	230V 50-60 Hz 3pol 4pol 5pol 6h 9h 9h	400V 50-60 Hz 3pol 4pol 5pol 9h 6h 6h	500V 50-60 Hz 3pol 4pol 5pol 7h 7h 7h	Stück	g Stück
16	3		160522			1	1120
16	4			160523		1	1350
16	5			160524		1	1450
32	4			160525		1	2000
32	5			160526		1	2200

Bals no. 160526

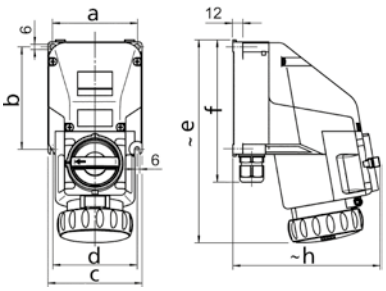

MB 10338E00

Ampere	16	16	16	32	32
Poles	3	4	5	4	5
a	94.0	104.0	104.0	124.0	124.0
b	115.0	125.0	125.0	150.0	150.0
c	105.0	115.0	115.0	135.0	135.0
d	93.0	103.0	103.0	123.0	123.0
e	232.0	248.0	248.0	281.0	281.0
f	164.0	174.0	174.0	204.0	204.0
h	168.0	181.0	181.0	207.0	207.0

Surface mounting socket outlet

- For use in Zone 1 and 21
- Large handle, can be locked in position 0 and 1
- Optimal contact by means of self-cleaning laminated contacts
- Low plugging and pulling forces
- With motor switching capacity AC-3 acc. to IEC/EN 60947-3
- Optional auxiliary contacts for control and signalling purposes
- IP66 in any application position
- Acc. to EX de IIC T6 T5, with intrinsically safe auxiliary contacts Ex de(ia) IIC T6 T5 - gas explosion protection - 32-125A
- Acc. to EX tD A21 IP66 - dust explosion protection - 32 - 125A
- Cable entry: 1 x M50 & 1 x sealing plug M25 (63A)

2P+E Ampere	3P+E	3P+N+E Polzahl	110V 50-60 Hz 3pol 4h	4pol 4h	5pol 4h	230V 50-60 Hz 3pol 6h	4pol 9h	5pol 9h	400V 50-60 Hz 3pol 9h	4pol 6h	5pol 6h	500V 50-60 Hz 3pol 7h	4pol 7h	5pol 7h	Stück	g Stück
63		4							160527						1	7800
63		5							160528						1	7800

Bals no. 160528

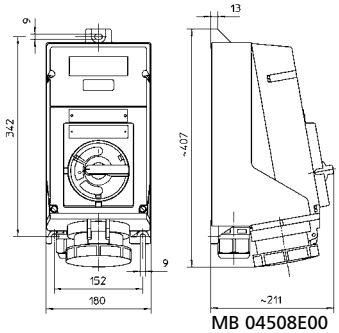

MB 04508E00

Surface mounting socket outlet

- For use in Zone 1 and 21
- Large handle, can be locked in position 0 and 1
- Optimal contact by means of self-cleaning laminated contacts
- Low plugging and pulling forces
- With motor switching capacity AC-3 acc. to IEC/EN 60947-3
- Optional auxiliary contacts for control and signalling purposes
- IP66 in any application position
- Acc. to EX de IIC T6 T5, with intrinsically safe auxiliary contacts Ex de(ia) IIC T6 T5 - gas explosion protection - 32-125A
- Acc. to EX tD A21 IP66 - dust explosion protection - 32 - 125A
- Cable entry: 1 x M63 & 1 x sealing plug M25 + 1 x M63 (125A)

2P+E Ampere	3P+E	3P+N+E Polzahl	110V 50-60 Hz 3pol 4h	4pol 4h	5pol 4h	230V 50-60 Hz 3pol 6h	4pol 9h	5pol 9h	400V 50-60 Hz 3pol 9h	4pol 6h	5pol 6h	500V 50-60 Hz 3pol 7h	4pol 7h	5pol 7h	Stück	g Stück
125		4							160529						1	20,800
125		5							160530						1	21,400

Bals no. 160530

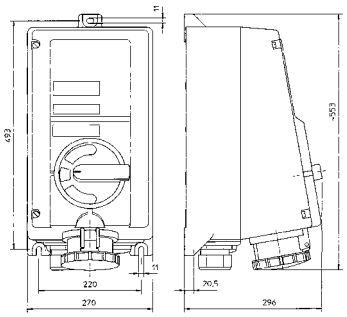

MB 04504E00

EX DEVICES FOR ZONE 1 AND 21

■ for occasional hazardous explosive atmospheres

Plug

- For use in Zone 1 and 21
- Low plugging and pulling forces through floating pins
- Optional auxiliary contacts for control and signalling purposes
- IP66 in any application position
- Acc. to EX de IIC T6, with intrinsically safe auxiliary contacts Ex de(ia) IIC T6 - gas explosion protection - 16A
- Acc. to EX tD A21 IP66 - dust explosion protection - 16A
- Acc. to EX de IIC T6 T5, with intrinsically safe auxiliary contacts Ex de(ia) IIC T6 T5 - gas explosion protection - 32A
- Acc. to EX tD A21 IP66 - dust explosion protection - 32A
- For temp., see explosion protection details (-50°C on request - with internal lubrication with silicone grease)
- Cable diameter 8…20 mm (16A)/ 12…28 mm (32A)

2P+E Ampere	3P+E Polzahl	3P+N+E Polzahl	110V 50-60 Hz 3pol 4h	110V 50-60 Hz 4pol 4h	110V 50-60 Hz 5pol 4h	230V 50-60 Hz 3pol 6h	230V 50-60 Hz 4pol 9h	230V 50-60 Hz 5pol 9h	400V 50-60 Hz 3pol 9h	400V 50-60 Hz 4pol 6h	400V 50-60 Hz 5pol 6h	500V 50-60 Hz 3pol 7h	500V 50-60 Hz 4pol 7h	500V 50-60 Hz 5pol 7h	Stück	g Stück
16	3					211088									1	420
16	4								211089						1	380
16	5								211090						1	430
32	4								211091						1	500
32	5								211092						1	600

Bals no. 211092

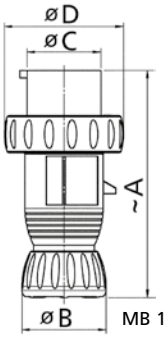

MB 10337E00

Ampere	16	16	16	32	32
Poles	3	4	5	4	5
A	176.0	176.0	176.0	204.0	204.0
ø B	60.0	60.0	60.0	72.0	72.0
ø C	43.5	49.0	56.5	57.0	63.4
ø D	76.0	89.0	92.0	99.0	102.0

Plug

- For use in Zone 1 and 21
- Low plugging and pulling forces through floating pins
- Optional auxiliary contacts for control and signalling purposes
- IP66 in any application position
- Acc. to EX de IIC T6 T5, with intrinsically safe auxiliary contacts Ex de(ia) IIC T6 T5 - gas explosion protection - 32-125A
- Acc. to EX tD A21 IP66 - dust explosion protection - 32 - 125A
- For temp., see explosion protection details (-50°C on request - with internal lubrication with silicone grease)
- Cable diameter 24…36 mm (63A)
- Cable diameter 30…50 mm (125A)

2P+E Ampere	3P+E Polzahl	3P+N+E Polzahl	110V 50-60 Hz 3pol 4h	110V 50-60 Hz 4pol 4h	110V 50-60 Hz 5pol 4h	230V 50-60 Hz 3pol 6h	230V 50-60 Hz 4pol 9h	230V 50-60 Hz 5pol 9h	400V 50-60 Hz 3pol 9h	400V 50-60 Hz 4pol 6h	400V 50-60 Hz 5pol 6h	500V 50-60 Hz 3pol 7h	500V 50-60 Hz 4pol 7h	500V 50-60 Hz 5pol 7h	Stück	g Stück
63	4								211093						1	880
63	5								211094						1	940
125	4								211095						1	1280
125	5								211096						1	1380

Bals no. 211096

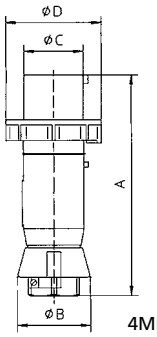

4MB100

Ampere	63	63	125	125
Poles	4	5	4	5
A	268.5	268.5	310.5	310.5
ø B	84.0	84.0	96.0	96.0
ø C	69.5	69.5	82.0	82.0
ø D	112.0	112.0	125.0	125.0

Protective caps
• For plug

	Bals no.
for 16A plug, 3p (not for extra-low voltage)	**8352**
for 16A plug, 4p	**8353**
for 16A plug, 5p	**8354**
for 32A plug, 4p	**8355**
for 16A plug, 5p	**8356**
for 63A plug, 4p and 5p	**8357**
for 125A plug, 4p and 5p	**8358**

Bals no. 105534

Cable roller
• Zone 1, 2
• Protection type IP 54

Bals no. 8955

Bals no. 8956

	Bals no.
16A, 230V, 3p, 6h, with 30m Proflex cable, 3x2.5mm²	**8955**
16A, 400V, 5p, 6h, with 30m Proflex cable, 5x2.5mm²	**8956**

Socket distributor
• Zone 1, 2, 21, 22
• Protection type IP 54

Bals no. **On request**

Bals Elektrotechnik GmbH & Co. KG
D-57399 Kirchhundem-Albaum
Phone: +49 27 23/771-0 · Fax: +49 27 23/771-177/178
E-mail: info@bals.com · Internet: www.bals.com

999 314 07.13